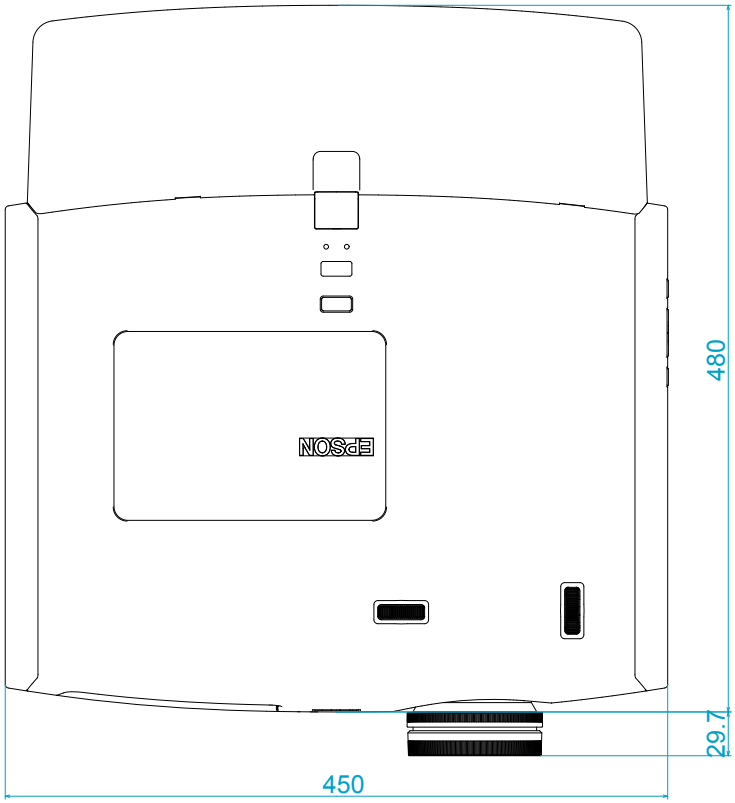
EPSON
480
29.7
450

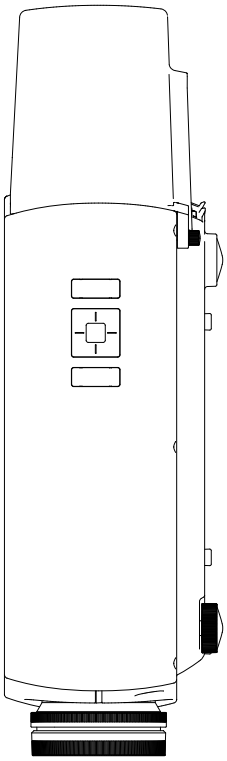

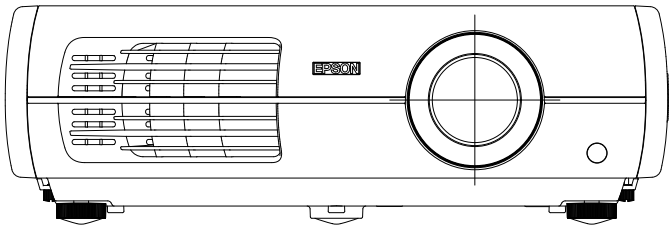
EPSON

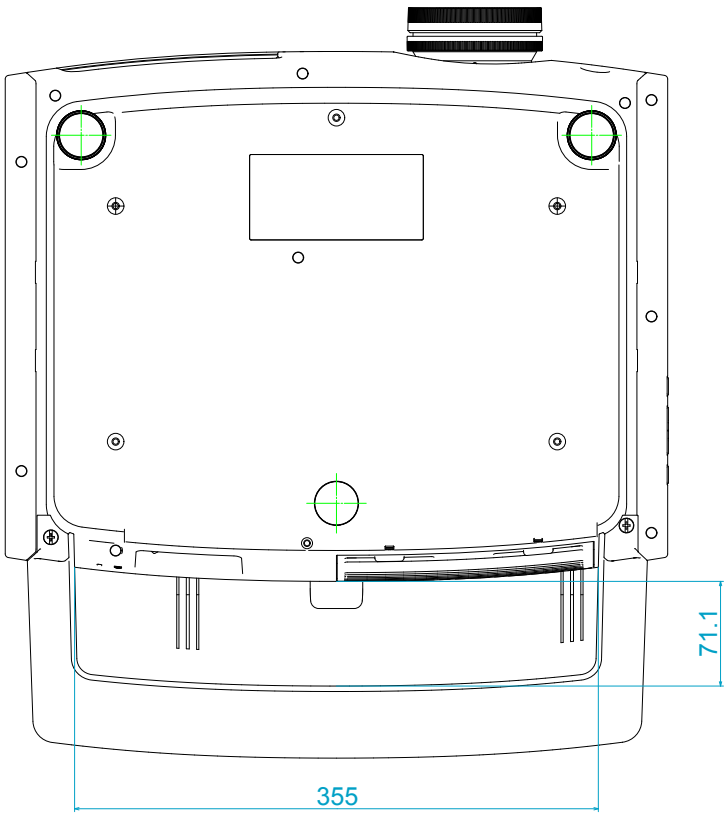
71.1
355